1988 T-Box & Hydrostats Assembly Model ZTR 501

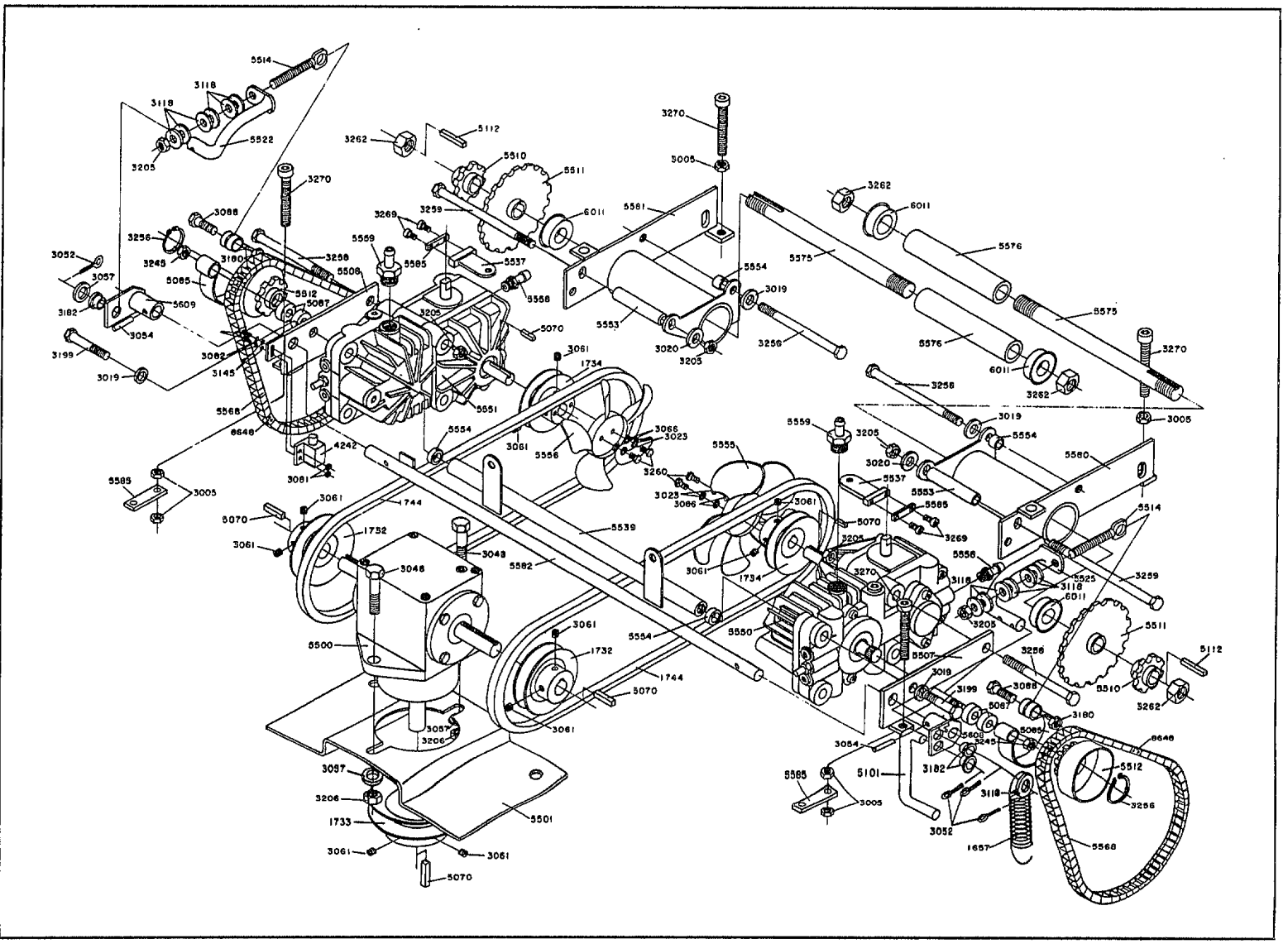

Part No. 9002

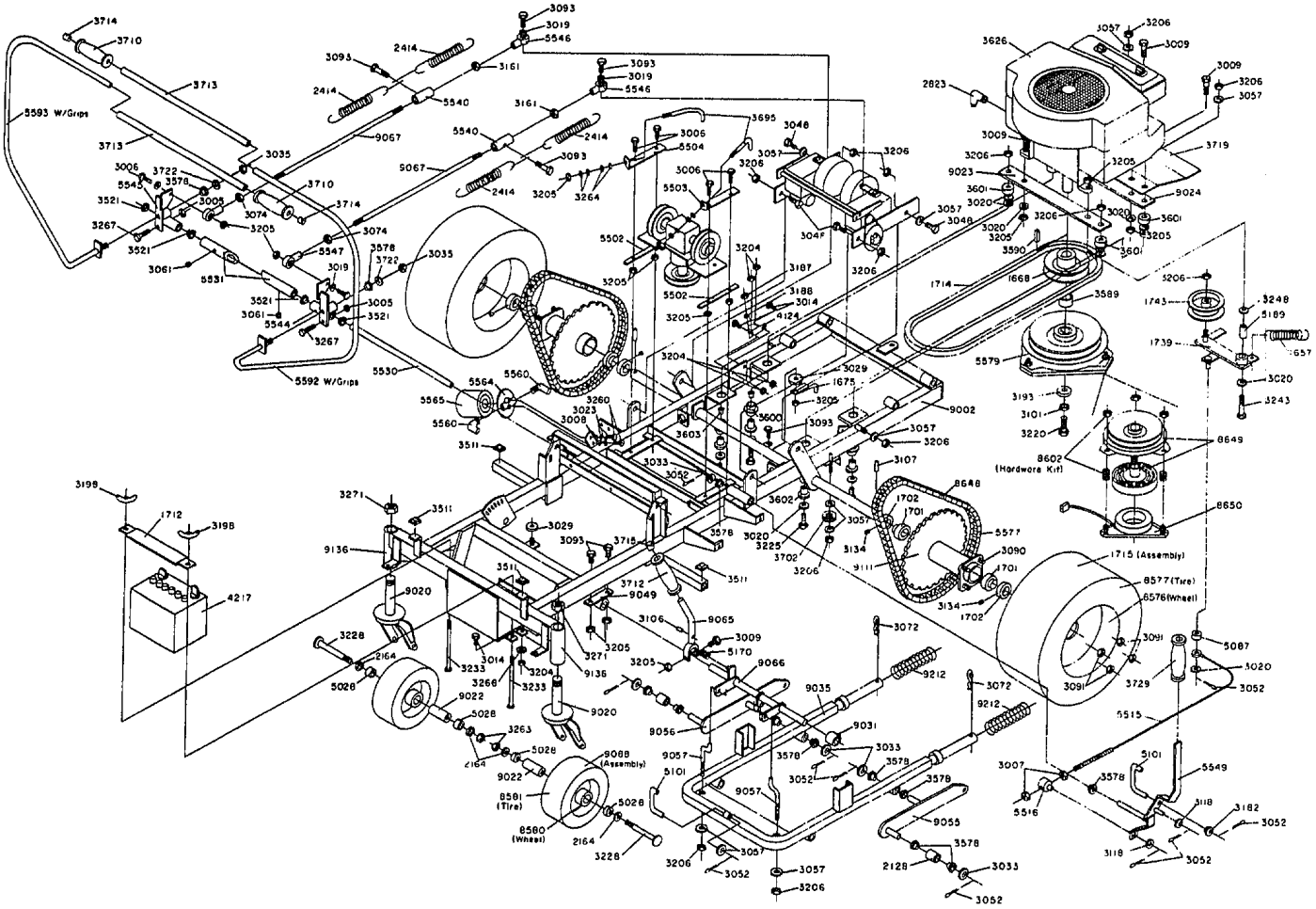

1988 Chassis Assembly Model ZTR 501

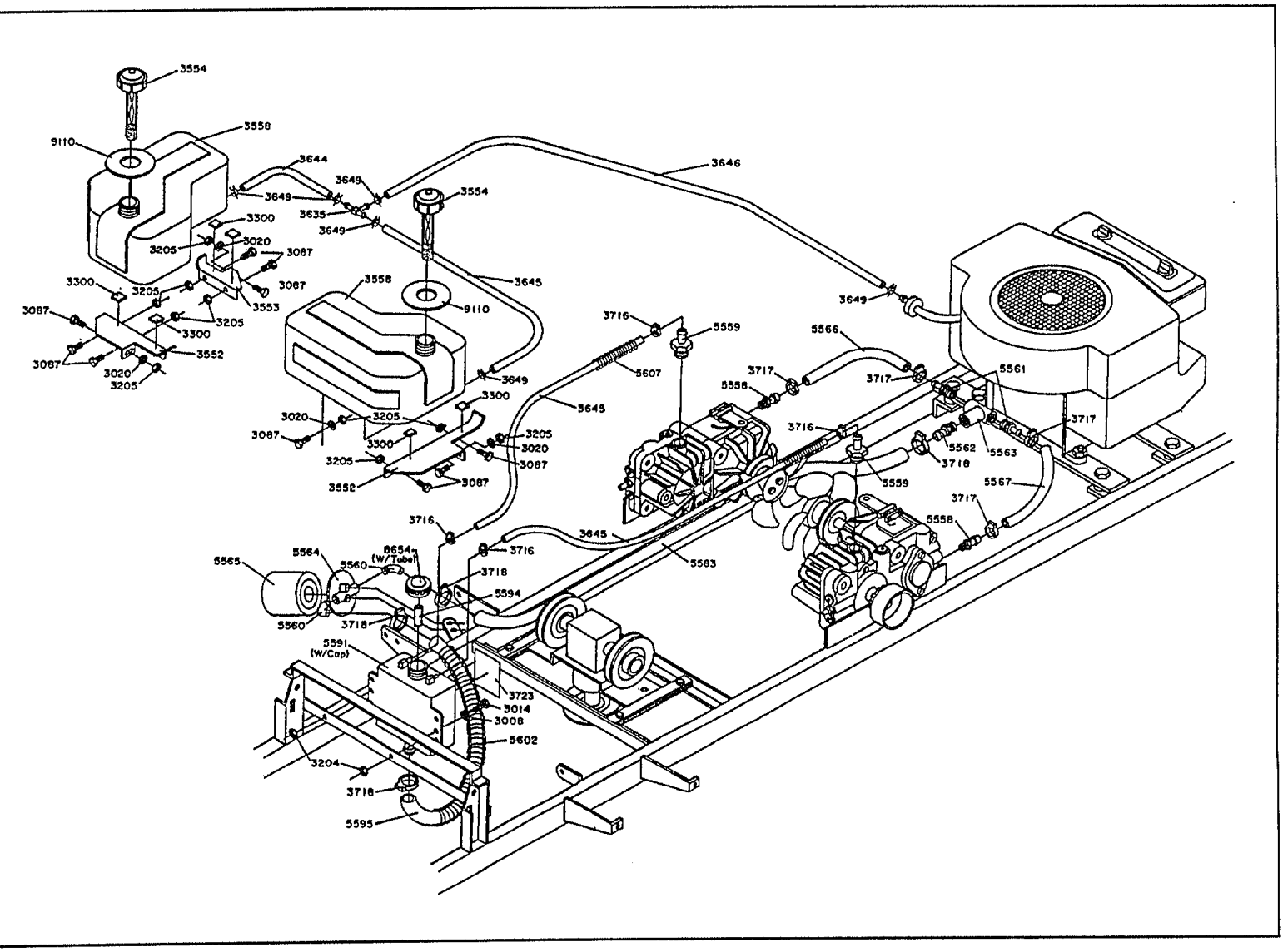

1988 Fuel & Hydraulic Tanks & Fittings Assemblies Model ZTR 501

1988 Mower Deck Assembly Model ZTR 501

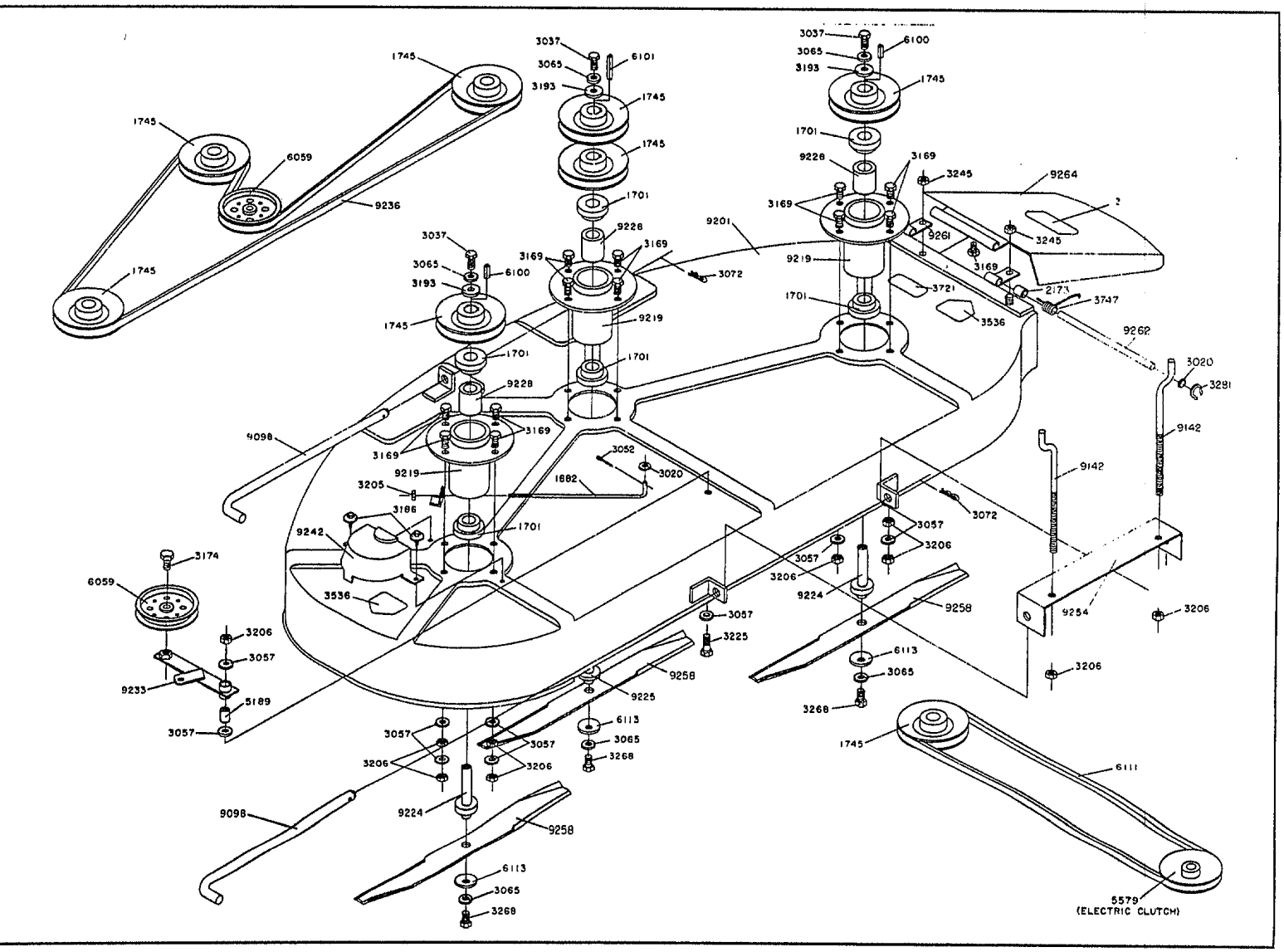

1988 Body Assembly Model ZTR 501

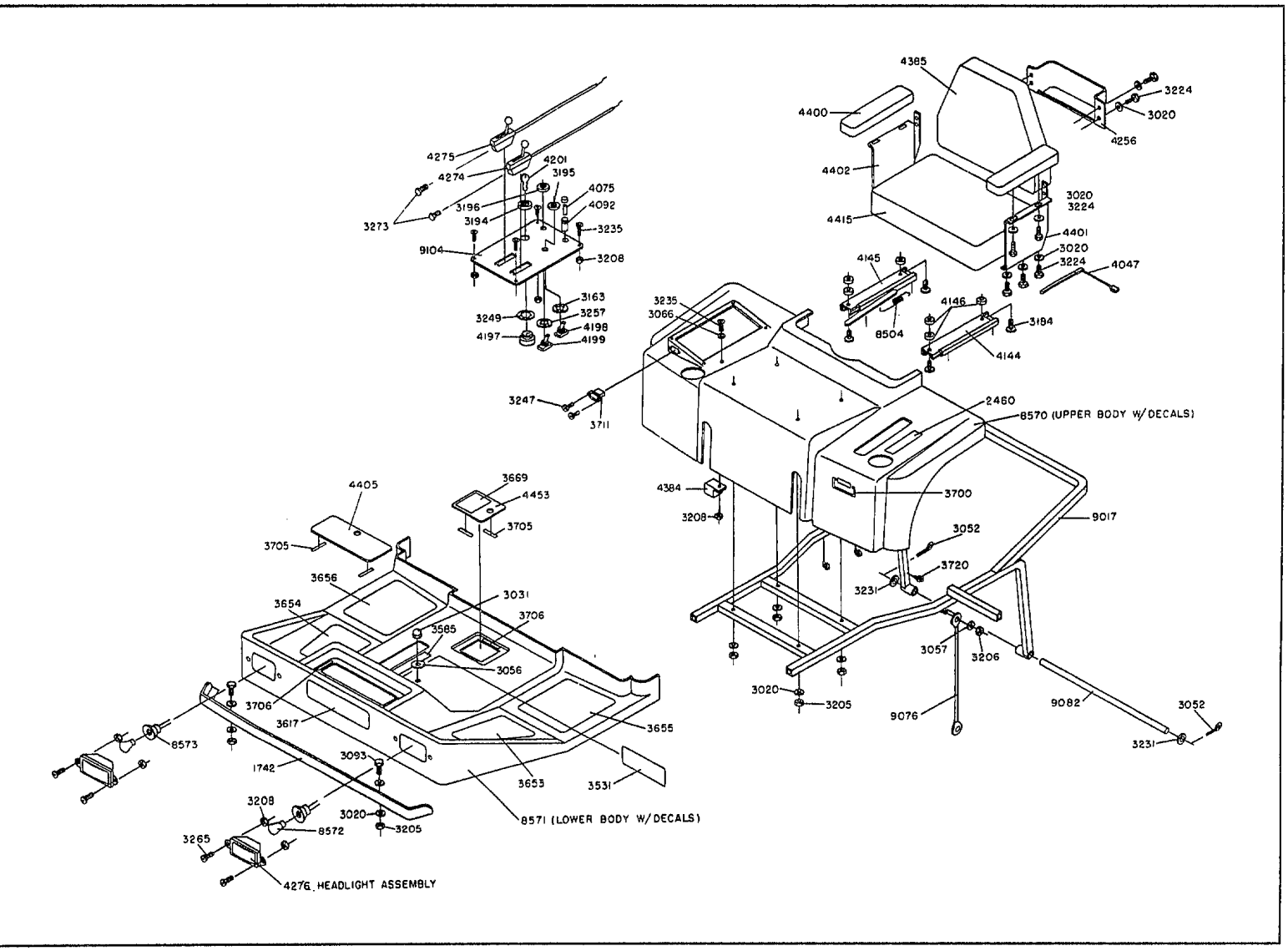

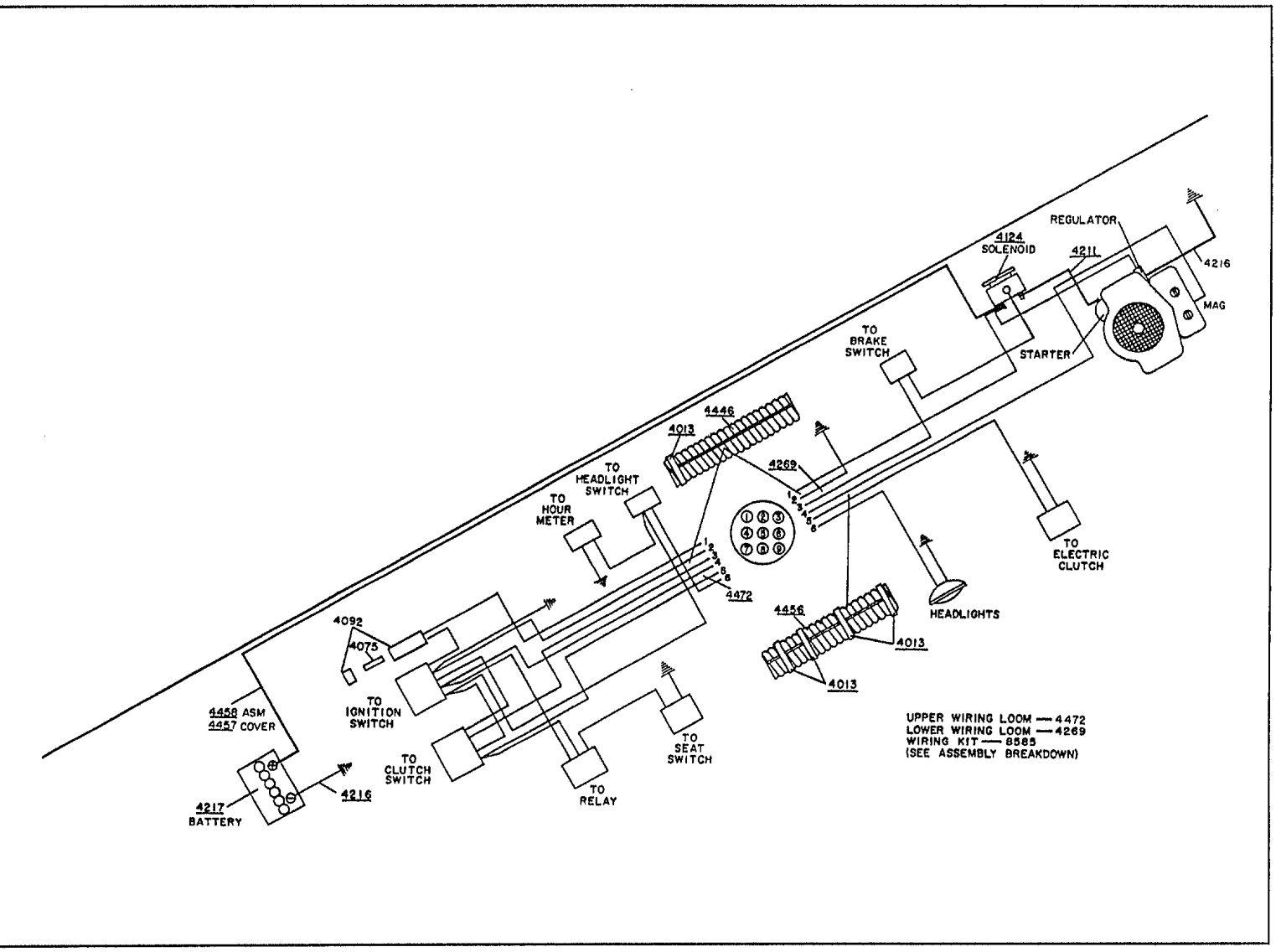

1988 Wiring Assembly Model ZTR 501