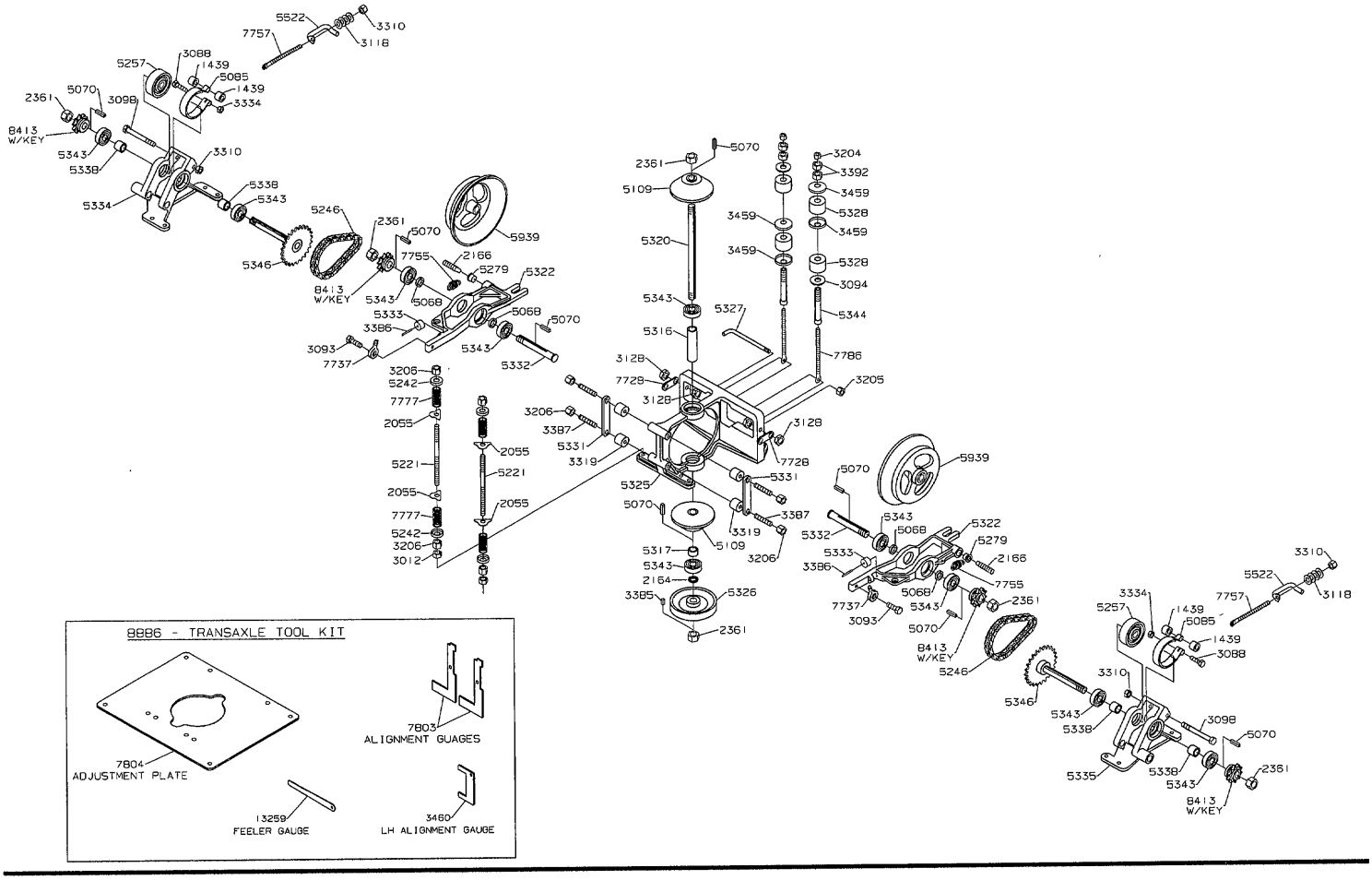
8886 - TRANSAXLE TOOL KIT
7804
ADJUSTMENT PLATE
7803
ALIGNMENT GUAGES
13259
FEELER GAUGE
3460
LH ALIGNMENT GAUGE

MODEL YEAR 2001

4423 CHASSIS

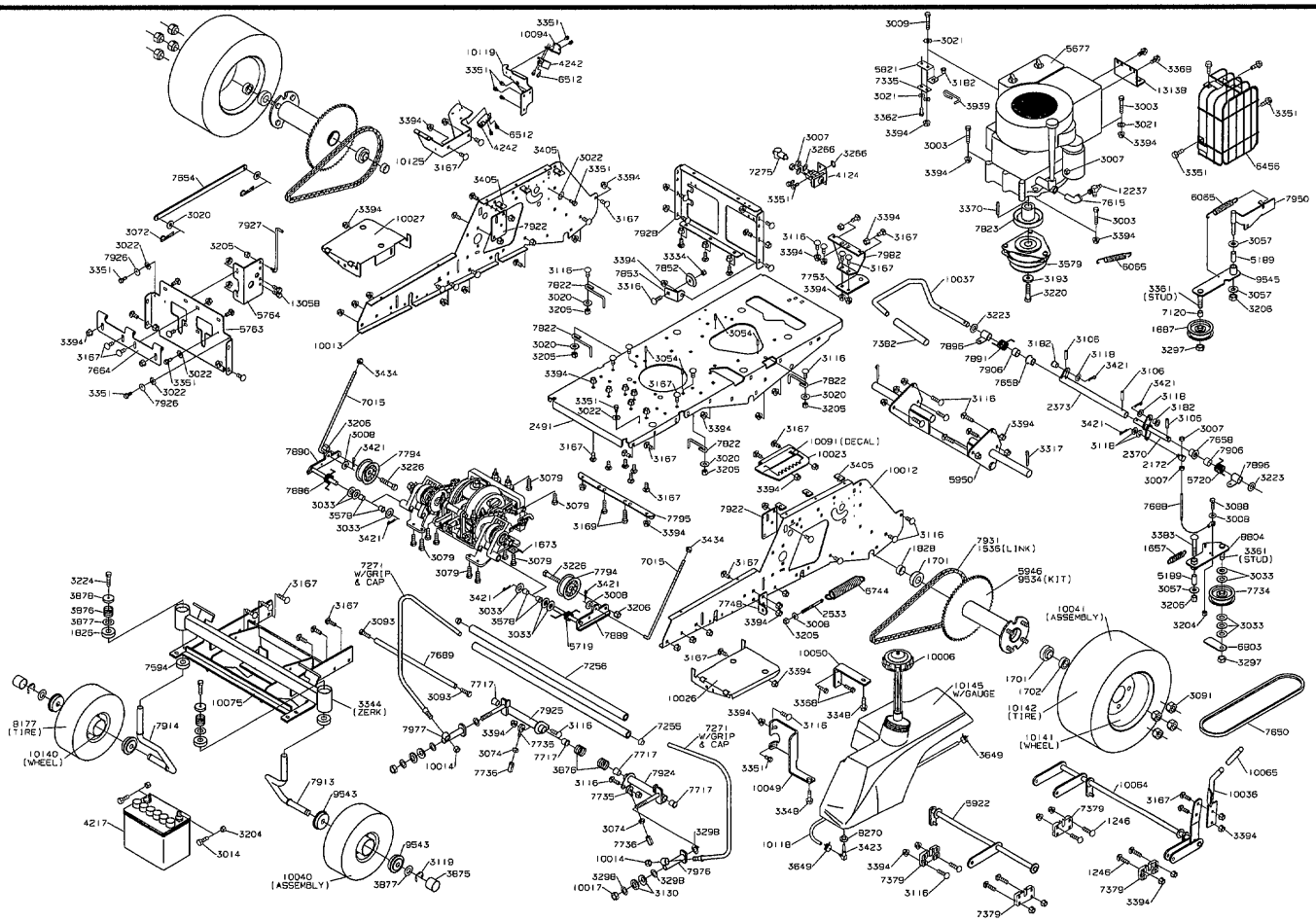

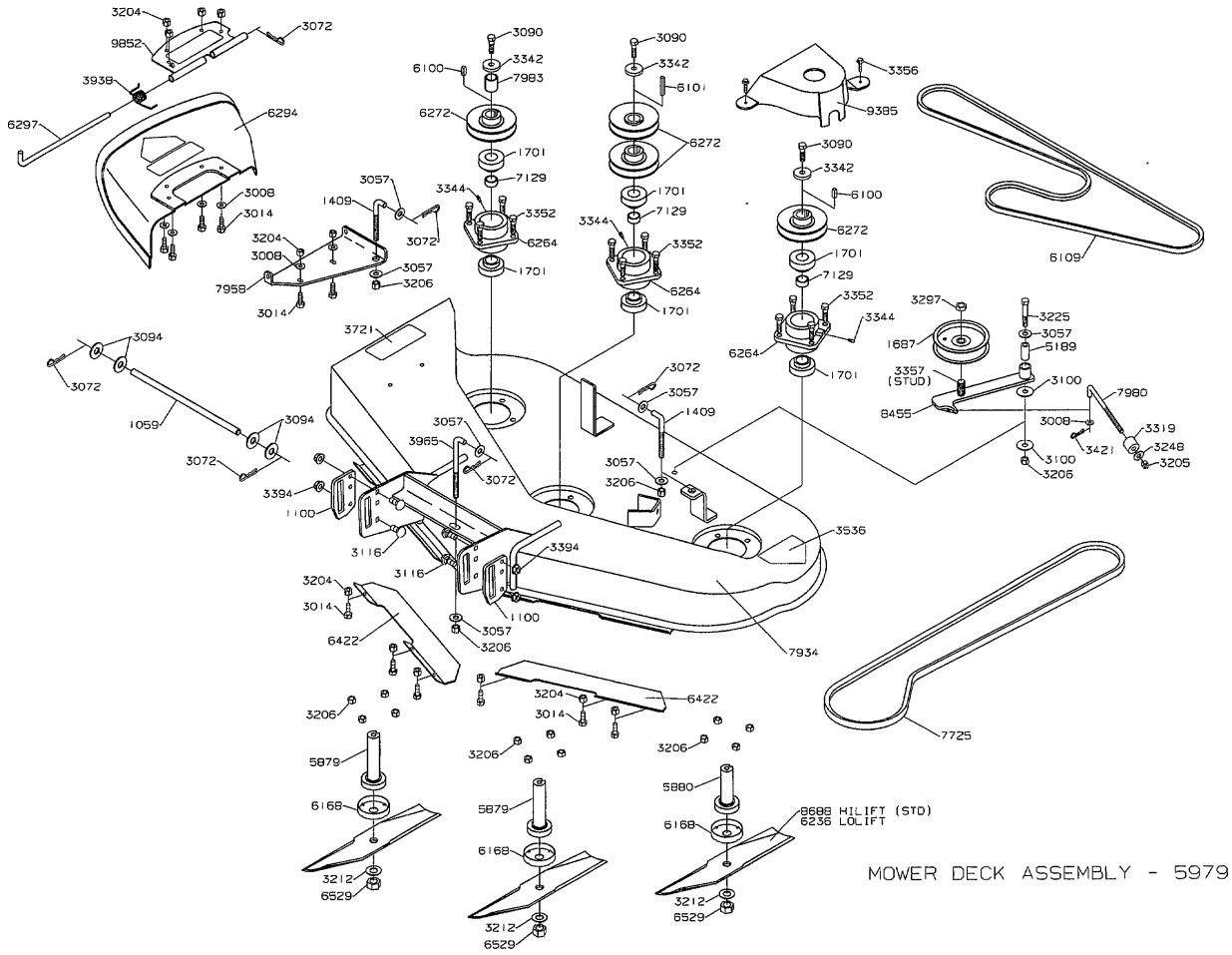

MOWER DECK ASSEMBLY - 5979

MODEL YEAR 2001

4423 BODY

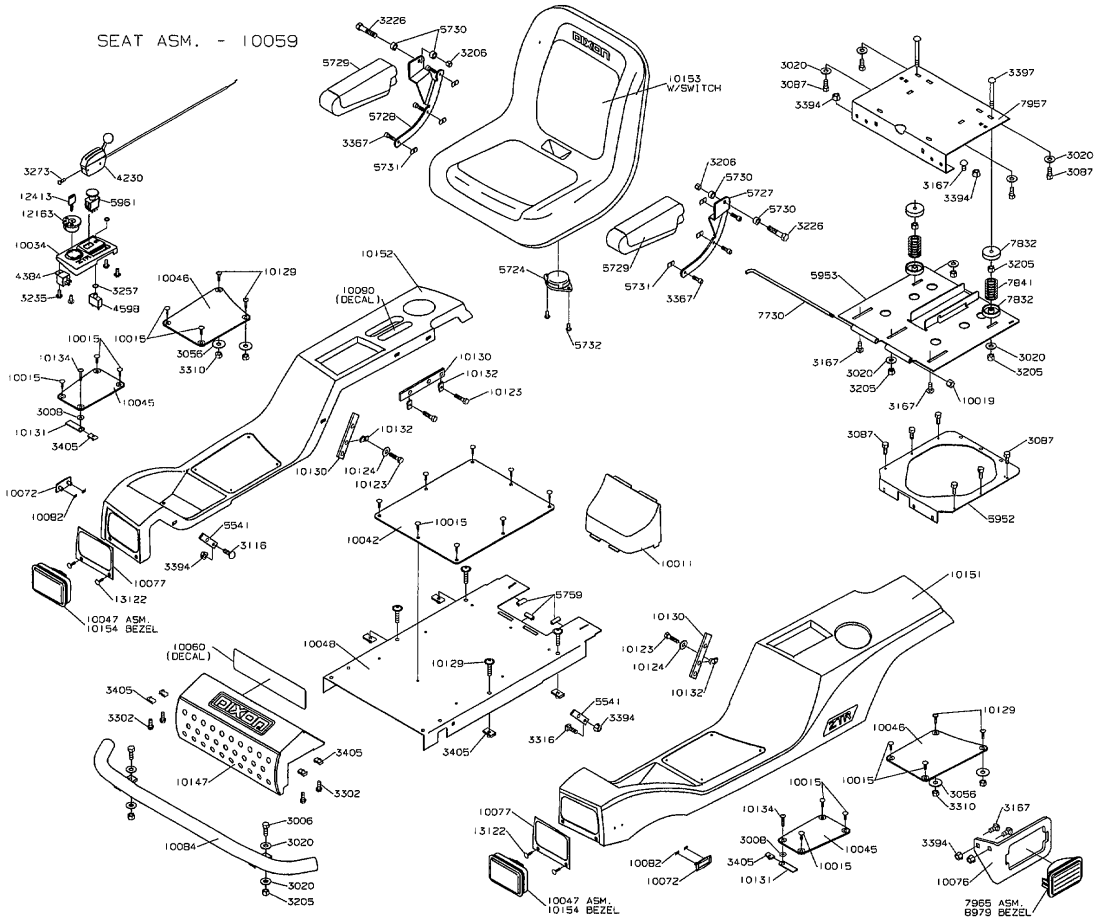

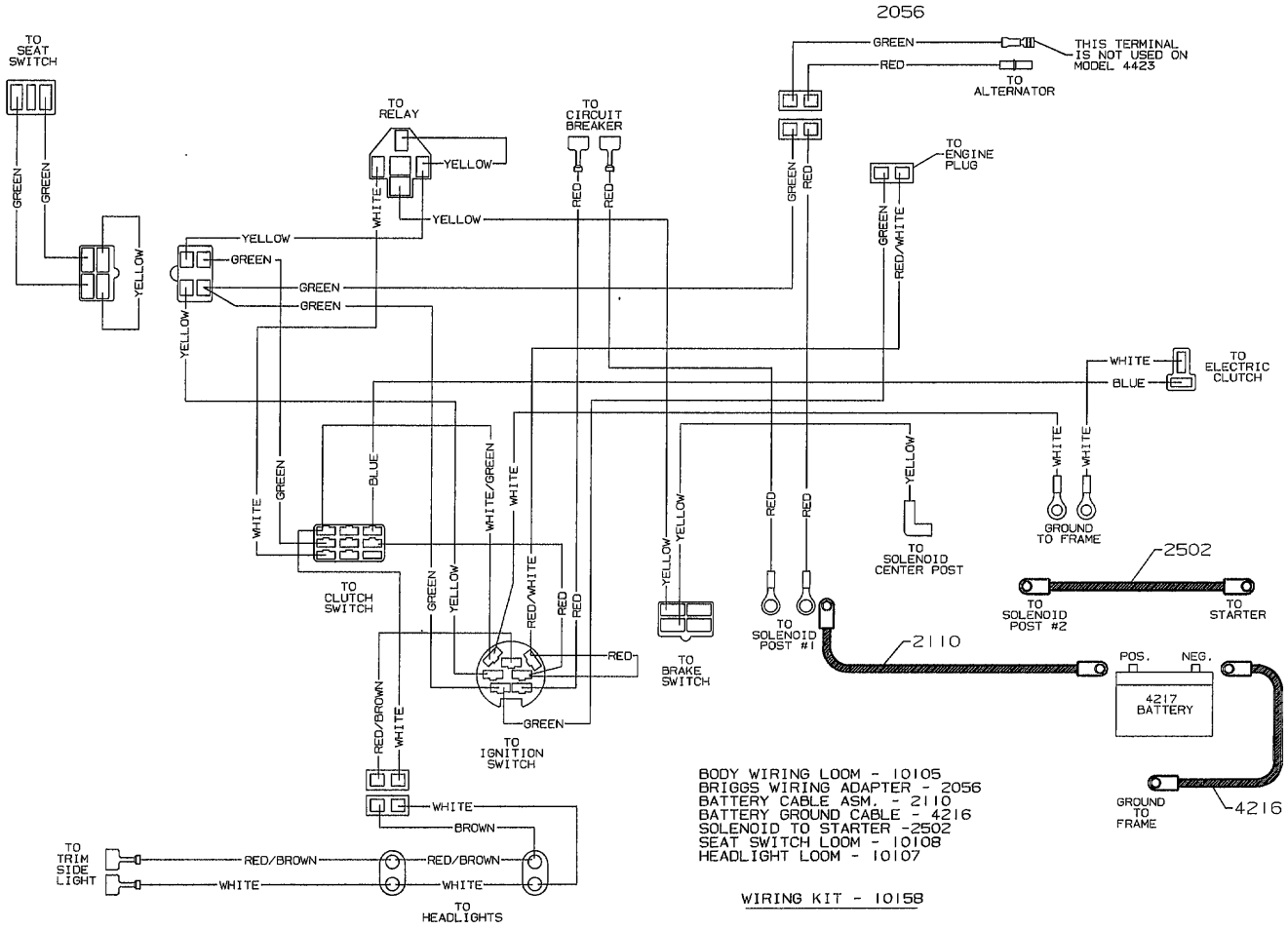

BODY WIRING LOOM - 10105
BRIGGS WIRING ADAPTER - 2056
BATTERY CABLE ASM. - 2110
BATTERY GROUND CABLE - 4216
SOLENOID TO STARTER -2502
SEAT SWITCH LOOM - 10108
HEADLIGHT LOOM - 10107

WIRING KIT - 10158