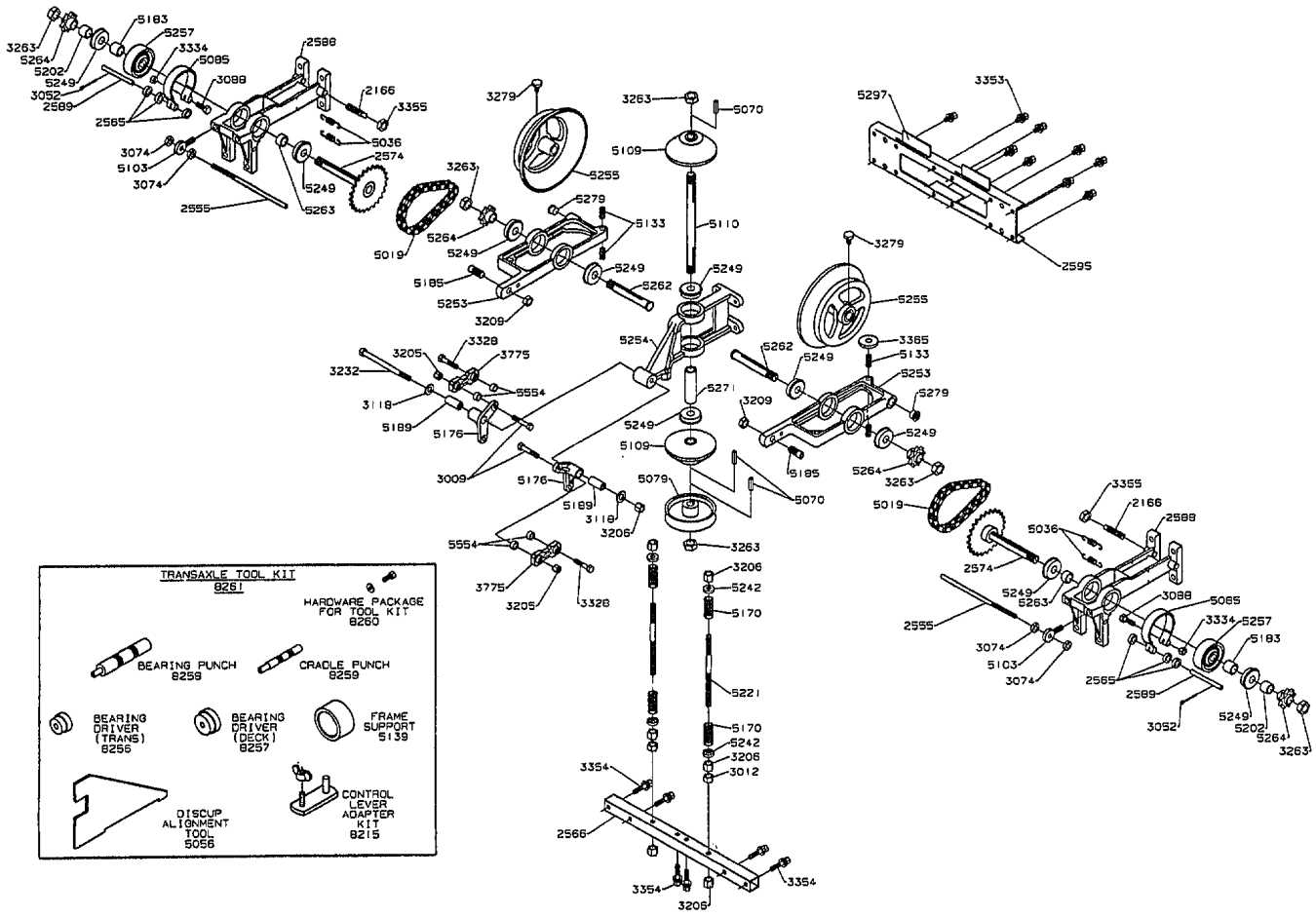

1992 Transaxle Assembly Model ZTR 361

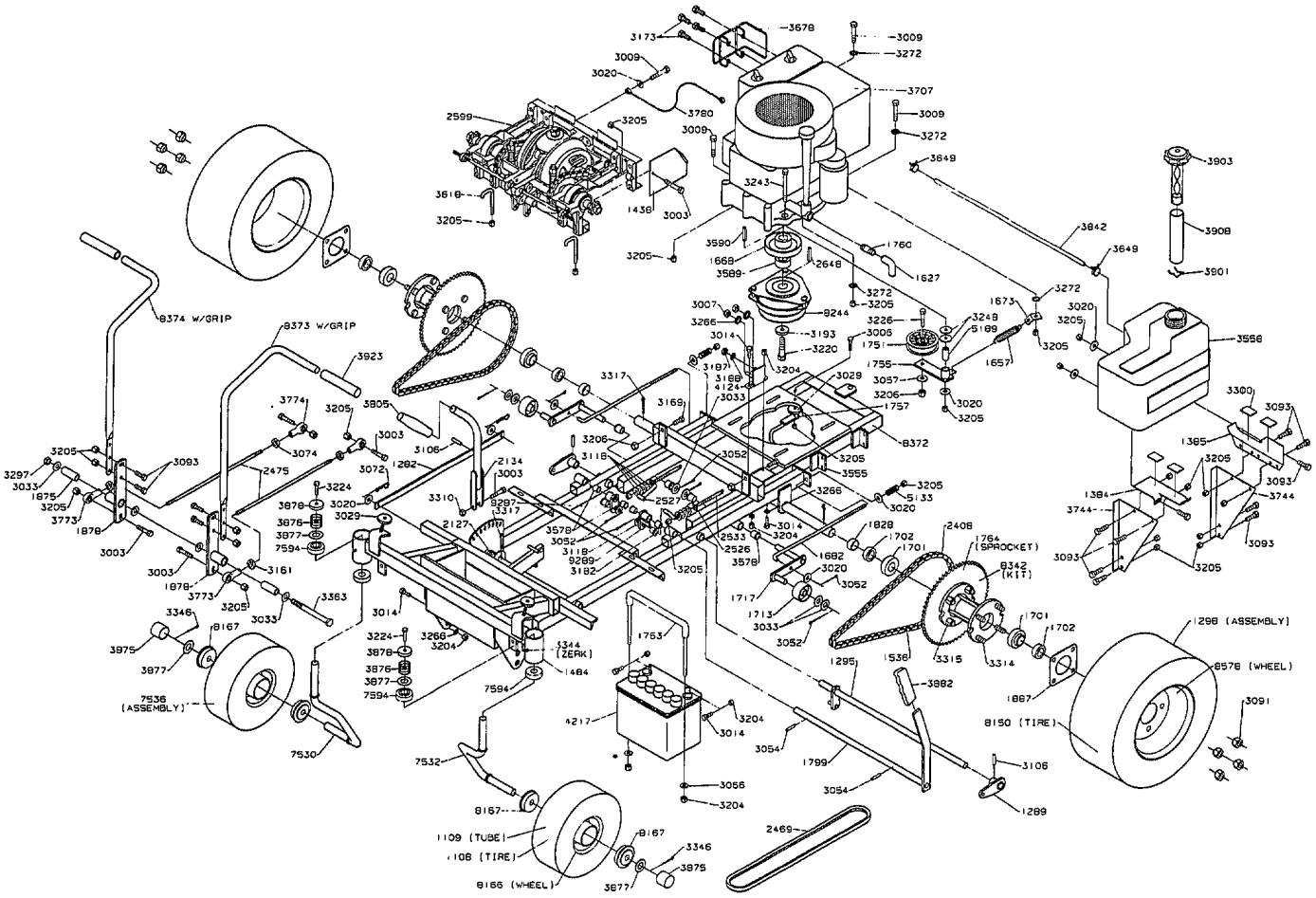

1992 Chassis Assembly Model ZTR 361

1992 Mower Deck Assembly Model ZTR 361

Part No. 1302

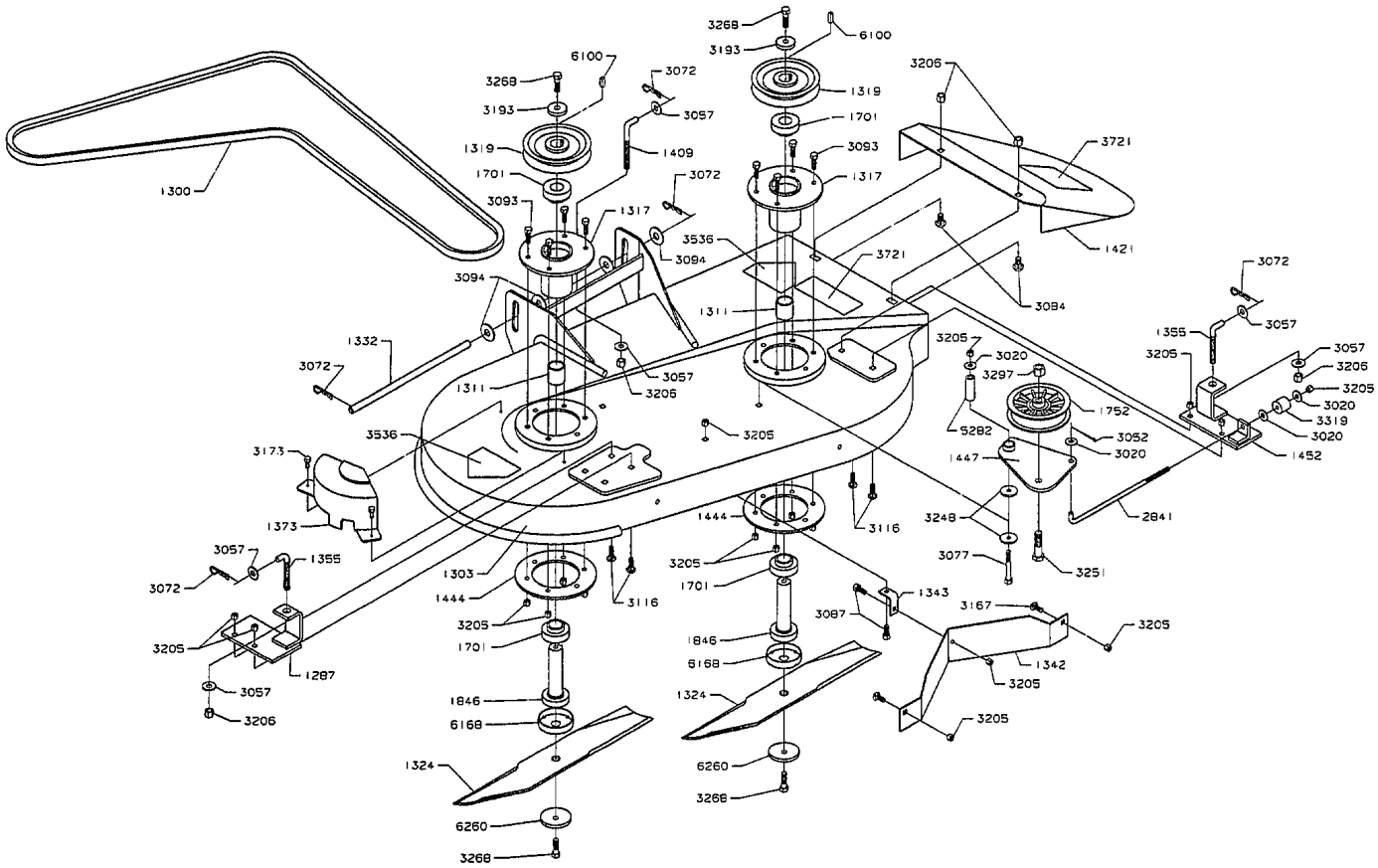

1992 Body Assembly Model ZTR 361

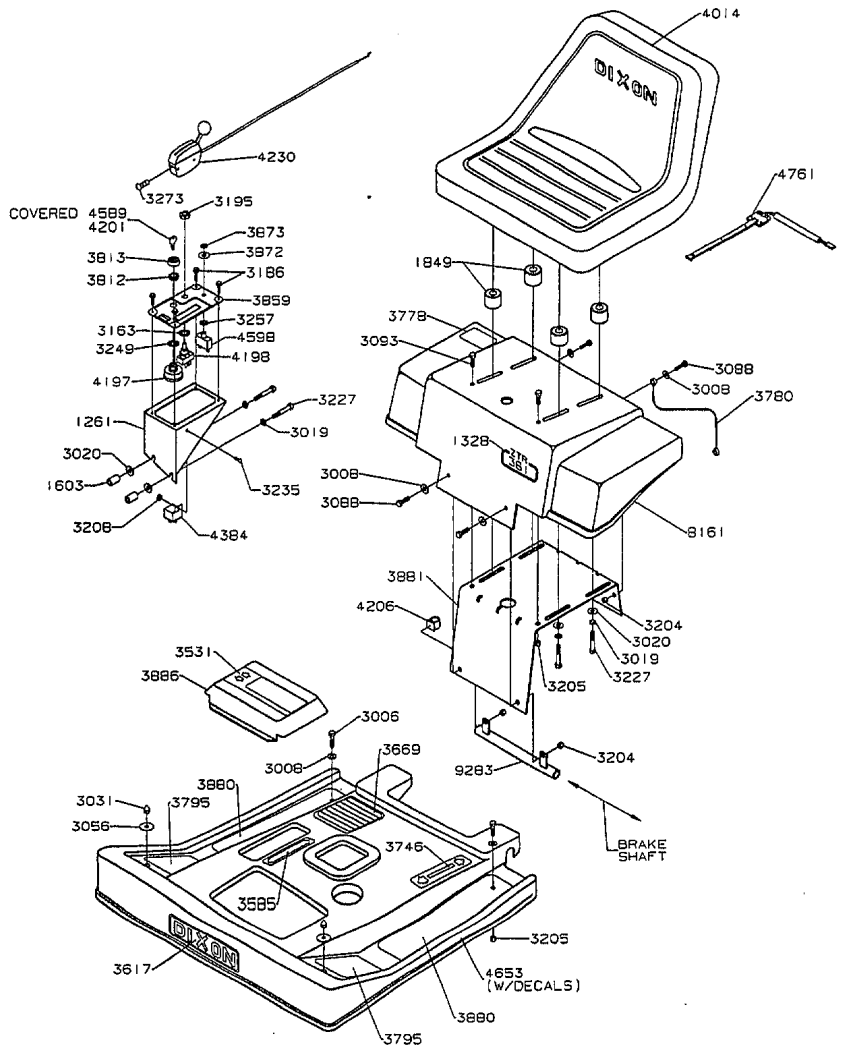

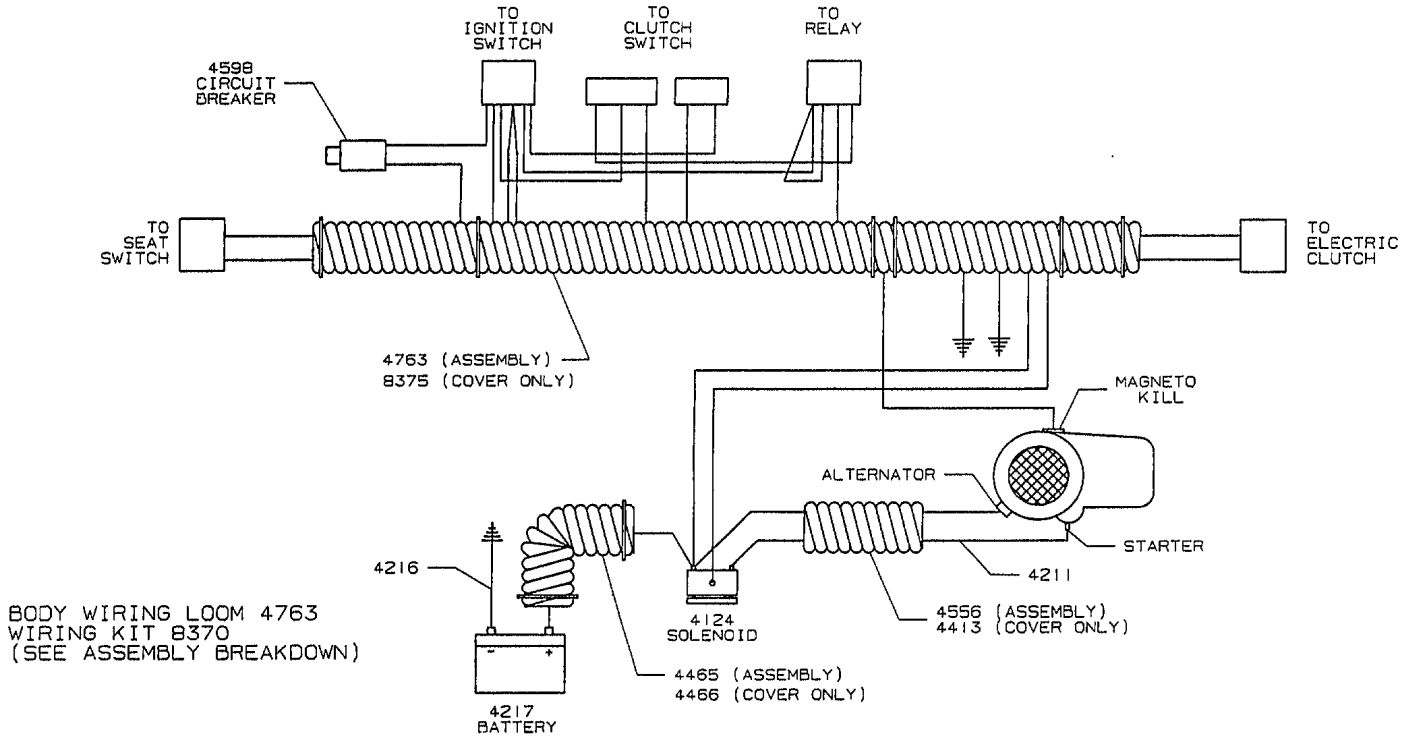

1992 Wiring Assembly Model ZTR 361